Holmatro
Telescopic Ram TR 5370 LP

Compact Strength for Critical Moments

Product Overview

- Holmatro Telescopic Ram TR 5370 LP. Largest model ram with telescopic plunger - 5000 series. Lighter than ever, improved performance. With integrated laser pointer for first-time-right positioning.
- Standard supplied with:
  - Integrated laser pointer in ram head
  - Integrated LED lighting at both the plunger side and base side of the ram
  - Ergonomic carrying handle
  - Redesigned, ergonomic control handle with improved grip
  - CORE Technology: quicker, safer, easier

Key Features

- **Limited weight:**
  - Lighter than ever, thanks to new materials, component integration and smart design, reducing physical strain.

- **Increased performance:**
  - More spreading force in 2nd stage, where you need it the most, and more length to expand your extrication options

- **Integrated laser pointer in ram head:**
  - Marks the exact spot where the ram will touch the object after extension
  - Enables first-time-right positioning, which saves time and is safer for the patient

- **Integrated LED lighting:**
  - Illumination of both the plunger and the base side of the ram (6 LED lights in total)
  - You can start right away, both during the day and at night, without working in your own shadow

- **Ergonomic carrying handle:**
  - New handle design for easy carrying: tool remains in balance
  - Mounted parallel to tool to limit dimensions

- **Built-in Speed Valve:**
  - When unloaded, the plunger extends quickly to the desired distance to speed up positioning of your ram

- **New control handle:**
  - Improved ergonomic design, offering better grip for optimal tool control

Holmatro
Telescopic Ram TR 5370 LP
Compact Strength for Critical Moments

Specifications		
Article number		150.032.100
Model		TR 5370 LP
Short description		Telescopic Ram
Equipped with (connector type)		CORE
Max. working pressure	bar/Mpa	720 / 72
Spreading stroke 1st plunger	mm	450
Spreading stroke 2nd plunger	mm	425
Total spreading stroke	mm	825
Retracted length	mm	635
Extended length	mm	1510
Max. spreading force 1st plunger	kN/t	231 / 23.6
Max. spreading force 2nd plunger	kN/t	111 / 11.3
Required oil content (effective)	cc	1764
Hydraulic oil type		ISO-L HV VG 15/22
Number of plungers		2
Temperature range	°C	-20 +55
Dimensions (AxBxC)	mm	281 x 109 x 635
Weight (without hose)	kg	16.9
Weight, ready for use (hose connected acc. EN 13204 2025 Ed.)	kg	18.1
EN 13204 classification		TR231/450-111/425-16.9
EN 13204 compliant		Yes
NFPA 1960, HSF	kN/t	231 / 23.6
NFPA 1960, LSF	kN/t	111 / 11.3
NFPA 1960 compliant		Yes
EN 13204 2025 Ed classification		TR-231/450-111/425

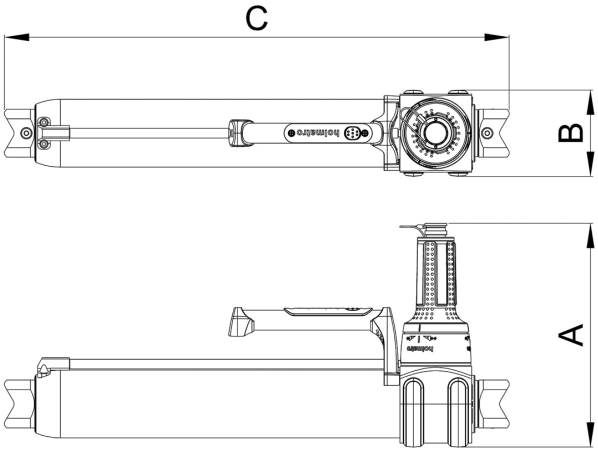

Standard supplied with
• Integrated laser pointer in ram head • Integrated LED lighting at both the plunger side and base side of the ram • Ergonomic carrying handle • Redesigned, ergonomic control handle with improved grip • CORE Technology: quicker, safer, easier

Safety Factors / Tests	
Hydraulic safety factor	2:1
Endurance test tool	1000 cycles of spreading while the tool is loaded
Endurance test dead man's handle	6000 cycles

Accessories	
Cross Ram Support Set XRS01	151.001.164
Ram Support HRS 22	150.181.011
Ram Support HRS 22 NCT	150.003.105

www.frsa.com.au | admin@frsa.com.au | + 61 7 3209 7422

FRSA
Fire Rescue Safety Australia